V02 USEM pg 1 English

VAR	MODEL	CUSTOMER	CAT. NO.	A	B	C	D	HP	VOLTS	SF	AMPS	HZ	RPM	CONN VOLTS	PROT.	DESCRIPTION / REMARKS
001	T55JXCSE-1556	USEM	D14CPA3P9	11.808	-----	-----	-----	1/4	115/230	1.35	3.70/1.86	60	1140	-----	AUTO	N56 ODP
002	T55KXCSW-1571	USEM	D14CPM3P9	10.808	-----	-----	-----	1/4	115/230	1.35	3.70/1.86	60	1140	230	MANUAL	N56 ODP

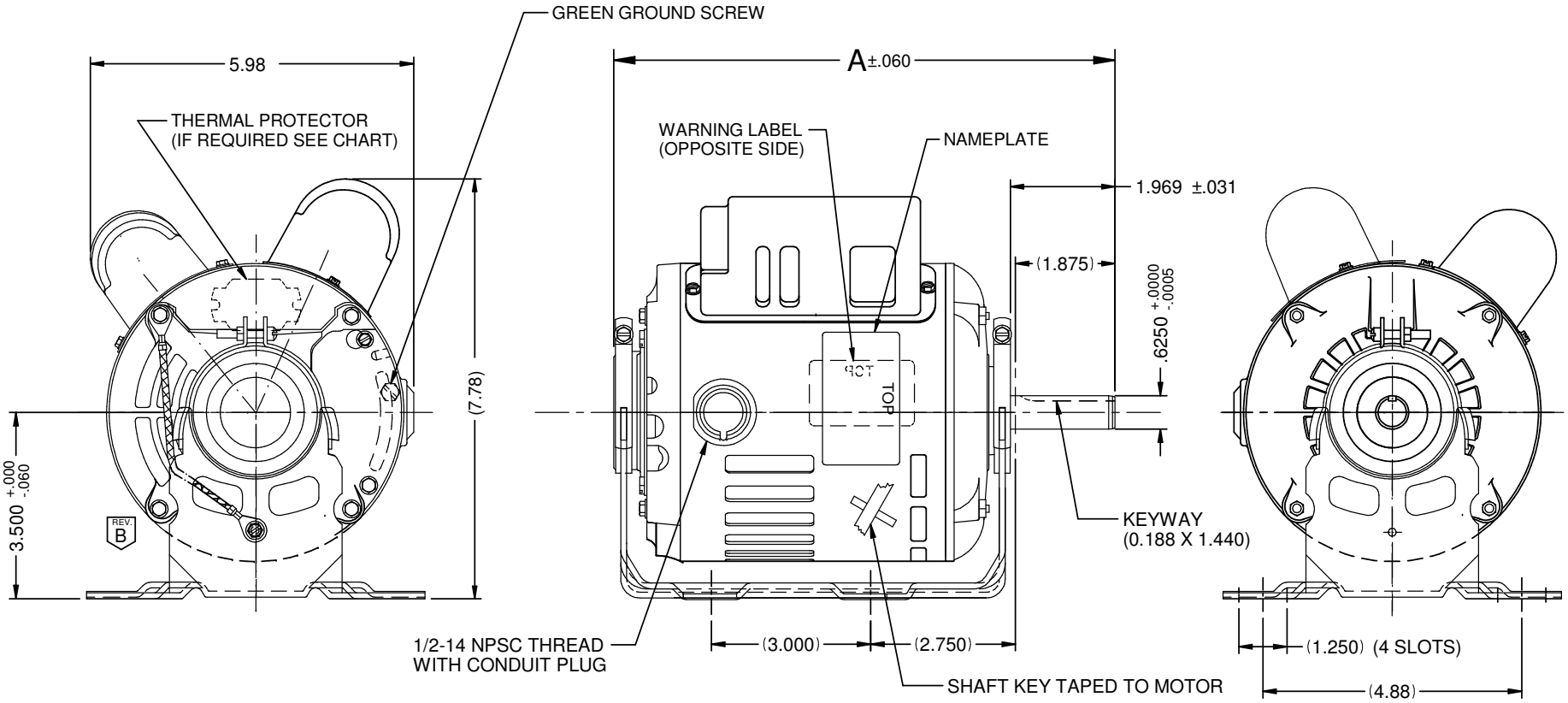

NIDEC MOTOR CORPORATION 25-Oct-17

MOTOR IS CCW LEAD END, TO REVERSE ROTATION INTERCHANGE RED AND BLACK LEADS

REFER TO S.E.I.M. 24-1

REVISION RECORD FOR: ECO E29755

CHANGE DRAWING TO SHOW THAT THE GROUND WIRE IS ROUTED FROM INSIDE THE BASE

ISSUED BY : J. ALVARADO

ENGINEER APPROVED : R. CRUZ

TOLERANCES ON DIMENSIONS (UNLESS OTHERWISE SPECIFIED)

INCHES	mm
.XX = ± .010 .XXX = ±.005	

ANGLES X°= ±1°

NIDEC MOTOR CORPORATION

INFORMATION DISCLOSED ON THIS DOCUMENT IS CONSIDERED PROPRIETARY AND SHALL NOT BE REPRODUCED OR DISCLOSEDWITHOUT WRITTEN CONSENT OF NIDEC MOTOR CORPORATION

REVISION DATE : **26-OCT-17**

TITLE	CODE	ITEM NO.	REV	SHEET NUMBER	DWG SIZE
CUSTOMER DETAIL DRAWING	V02	805619	B	1 OF 4	B

V02_NMCB (MAR-2014)

SOLIDEDGE