V02 USEM pg 1 English

VAR	MODEL	CUSTOMER	CAT. NO.	A	B	C	D	HP	VOLTS	SF	AMPS	HZ	RPM	CONN VOLTS	PROT.	DESCRIPTION / REMARKS
001	T63CPW-2183	USEM	D12CP3PH9	12.31	-------	-------	-------	1/2	115/230	1.25	4.8/2.4	60	1140		NONE	N56H, ODP

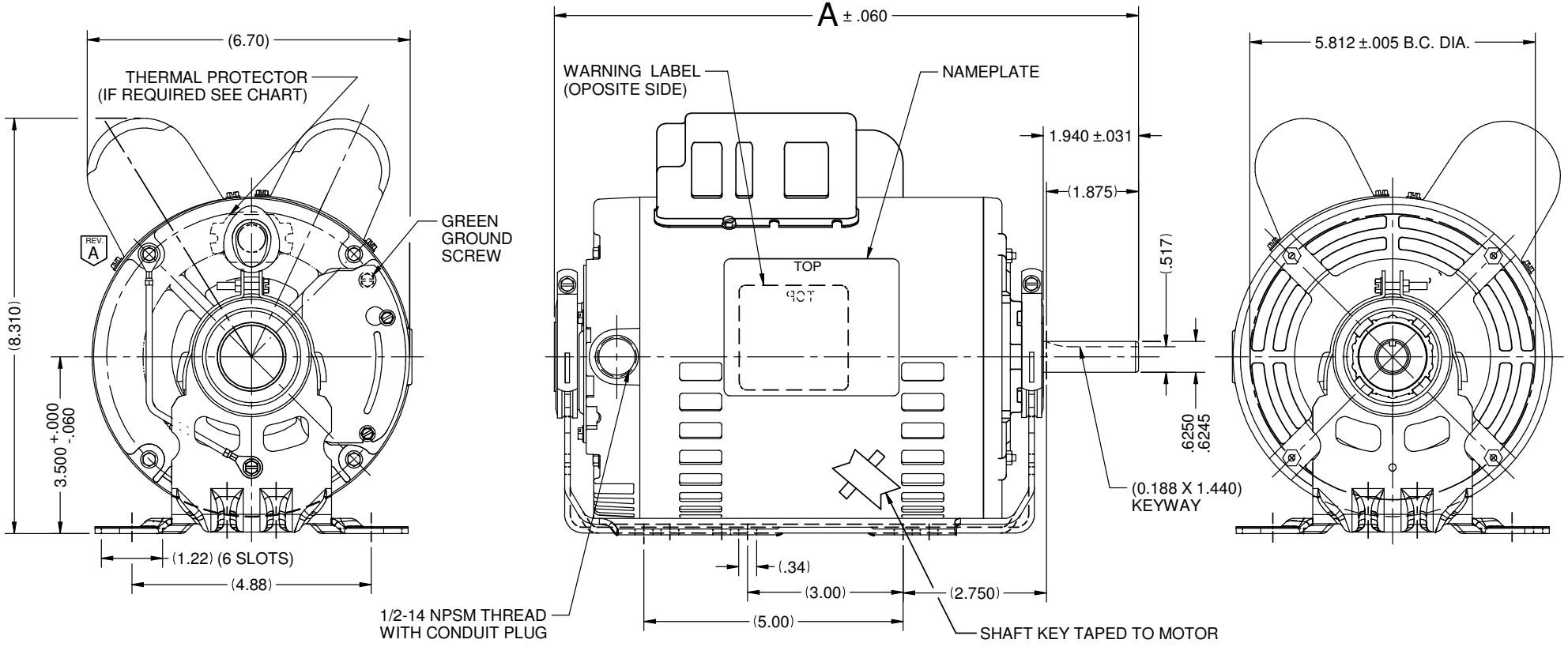

NIDEC MOTOR CORPORATION 17-Apr-18

MOTOR IS CCW ROTATION LEAD END, TO REVERSE ROTATION INTERCHANGE RED AND BLACK LEADS

REFER TO S.E.I.M. 24-1

REVISION RECORD FOR: ECO E30651

CHANGED VIEW OF GROUND LEAD TO BEHIND OF THE BASE.

ISSUED BY : C. LUGO

ENGINEER APPROVED : F. FLORES

TOLERANCES ON DIMENSIONS (UNLESS OTHERWISE SPECIFIED)

INCHES	mm
.XX = ± .010 .XXX = ±.005	

ANGLES X°= ±1°

NIDEC MOTOR CORPORATION

INFORMATION DISCLOSED ON THIS DOCUMENT IS CONSIDERED PROPRIETARY AND SHALL NOT BE REPRODUCED OR DISCLOSEDWITHOUT WRITTEN CONSENT OF NIDEC MOTOR CORPORATION

REVISION DATE : 17-APR-18

TITLE	CODE	ITEM NO.	REV	SHEET NUMBER	DWG SIZE
CUSTOMER DETAIL DRAWING	V02	804414	A	1 OF 4	B

V02_NMCB (MAR-2014)

SOLIDEDGE