VAR	MODEL	CUSTOMER	CAT. NO.	A	B	C	D	HP	VOLTS	SF	AMPS	HZ	RPM	CONN VOLTS	PROT.	DESCRIPTION / REMARKS
001	T055JXCPH-1513	USEM	D12CPA2PH9	11.308	--	--	--	1/2	115/230	1.25	5.0/2.6	60	1725	230	AUTO	N56H, ODP
002	T055CXCRS-1545	USEM	D12CPA1PH9	11.308	--	--	--	1/2	115/230	1.25	5.0/2.5	60	3450	230	AUTO	N56H, ODP
003	T055CRG-1536	USEM	D13CP2PH9	11.308	--	--	--	1/3	115/230 &110/220	1.35	3.9/1.9	60 & 50	1725 & 1425	230	NONE	N56H, ODP
~~004~~	~~T55JXCRP-1543~~	~~USEM~~	~~D13CPA3P9~~	~~11.308~~	~~--~~	~~--~~	~~--~~	~~1/3~~	~~115/230~~	~~1.35~~	~~4.4/2.3~~	~~60~~	~~1140~~	~~230~~	~~AUTO~~	~~N56H, ODP~~
~~005~~	~~T55KXCSV-1570~~	~~USEM~~	~~D13CPM3P9~~	~~11.308~~	~~--~~	~~--~~	~~--~~	~~1/3~~	~~115/230~~	~~1.35~~	~~4.4/2.3~~	~~60~~	~~1140~~	~~230~~	~~MANUAL~~	~~N56H, ODP~~

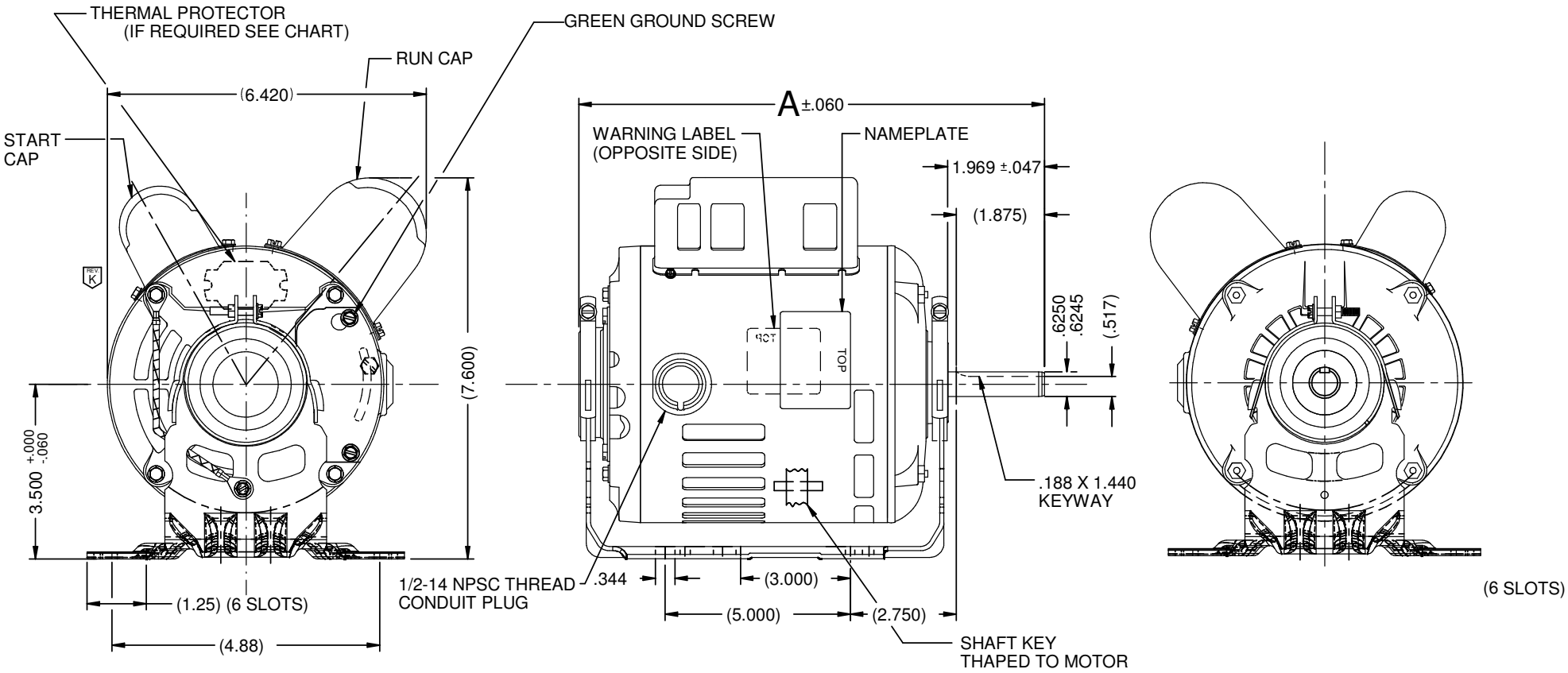

NIDEC MOTOR CORPORATION 09-Apr-18

ROTATION: CCW SWITCH END REVERSIBLE TO ROTATION INTERCHANGE BLUE WITH WHITE AND ORANGE WITH YELLOW LEADS

REFER TO S.E.I.M. 24-1

REVISION RECORD FOR: ECO E30650

CHANGED VIEW OF GROUND LEAD TO BEHIND OF THE BASE.

ISSUED BY : C. LUGO

ENGINEER APPROVED : F. FLORES

TOLERANCES ON DIMENSIONS (UNLESS OTHERWISE SPECIFIED)

INCHES	mm
.XX = ± .010 .XXX = ±.005	

ANGLES X°= ±1°

NIDEC MOTOR CORPORATION

INFORMATION DISCLOSED ON THIS DOCUMENT IS CONSIDERED PROPRIETARY AND SHALL NOT BE REPRODUCED OR DISCLOSEDWITHOUT WRITTEN CONSENT OF NIDEC MOTOR CORPORATION

REVISION DATE : 13-APR-18

TITLE	CODE	ITEM NO.	REV	SHEET NUMBER	DWG SIZE
CUSTOMER DETAIL DRAWING	V02	803214	K	1 OF 4	B