Functional Devices, Inc.
310 South Union Street
Russiaville, IN 46979
www.FunctionalDevices.com

Office 765.883.5538
Sales 800.888.5538
Fax 765.883.7505
Email sales@FunctionalDevices.com

c UL us LISTED Class 2

CE

MADE IN USA

RoHS

SPECIFICATIONS

Transformer: Two 100 VA Split-Bobbin
Over Current Protection: Circuit Breaker

Input Wires: "B10" Models Only
Input Power Wires
BLK: 120 Vac
WHT: Neutral
GRN: Ground

All Other Models
Primary Wires
BLK: 120 Vac
WHT: Common

Outlet Wires
BLK: 120 Vac
WHT: Neutral
GRN: Ground

Output Wires: "B10" Models Only
Auxiliary Output
BLU: 120 Vac

"W" Models Only
Transformer Output
WHT/YEL: 24 Vac
WHT/BLU: Common

Frequency: 50/60 Hz
24 Vac ON/OFF: On / Off Switch & Breaker
Main Breaker ON/OFF: Switch / Breaker (10 Amp) (Kills power to entire unit: Outlets (If Present), Aux. Output, and Transformer)** Total Combined Output 9A
Approvals: Class 2 UL Listed, UL916, UL508, C-UL, CE, RoHS
Dimensions: 4.500" x 8.625" x 4.500"
Weight: 8.600 lbs.

AC Power Supply

PSH100A100A Series

Enclosed Dual 100 VA Power Supplies, 120 to 24 Vac

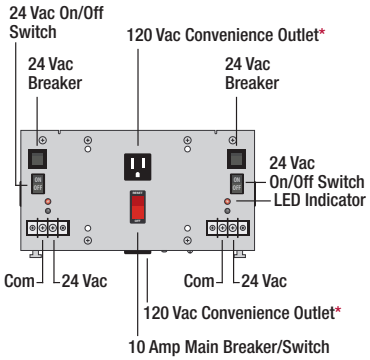

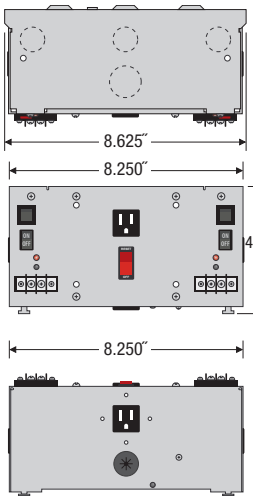

» All dual models: Model number denotes location of transformer within enclosure.
Ex: PSH40A100A
Left side Right side

Notes:
» *Move internal jumper to "HOT" position if you wish outlets to always be hot otherwise outlets will be switched by main breaker.
» To order UL508, add "-IC" to end of model number.

PSH100A100A Series Selection Guide

MODEL #	120 VAC OUTLETS	AUX OUTPUT WIRE	MAIN BREAKER ON INPUT POWER	SECONDARY CONFIGURATION
PSH100A100A	•			External Terminal Strip
PSH100A100AN				External Terminal Strip
PSH100A100ANW				Internal Wires
PSH100A100AW	•			Internal Wires
PSH100A100AB10**	•	•	10 Amp Switch / Breaker	External Terminal Strip
PSH100A100ANB10**		•	10 Amp Switch / Breaker	External Terminal Strip
PSH100A100ANWB10**		•	10 Amp Switch / Breaker	Internal Wires
PSH100A100AWB10**	•	•	10 Amp Switch / Breaker	Internal Wires

Notes